Short-Circuit ANSI Example 1

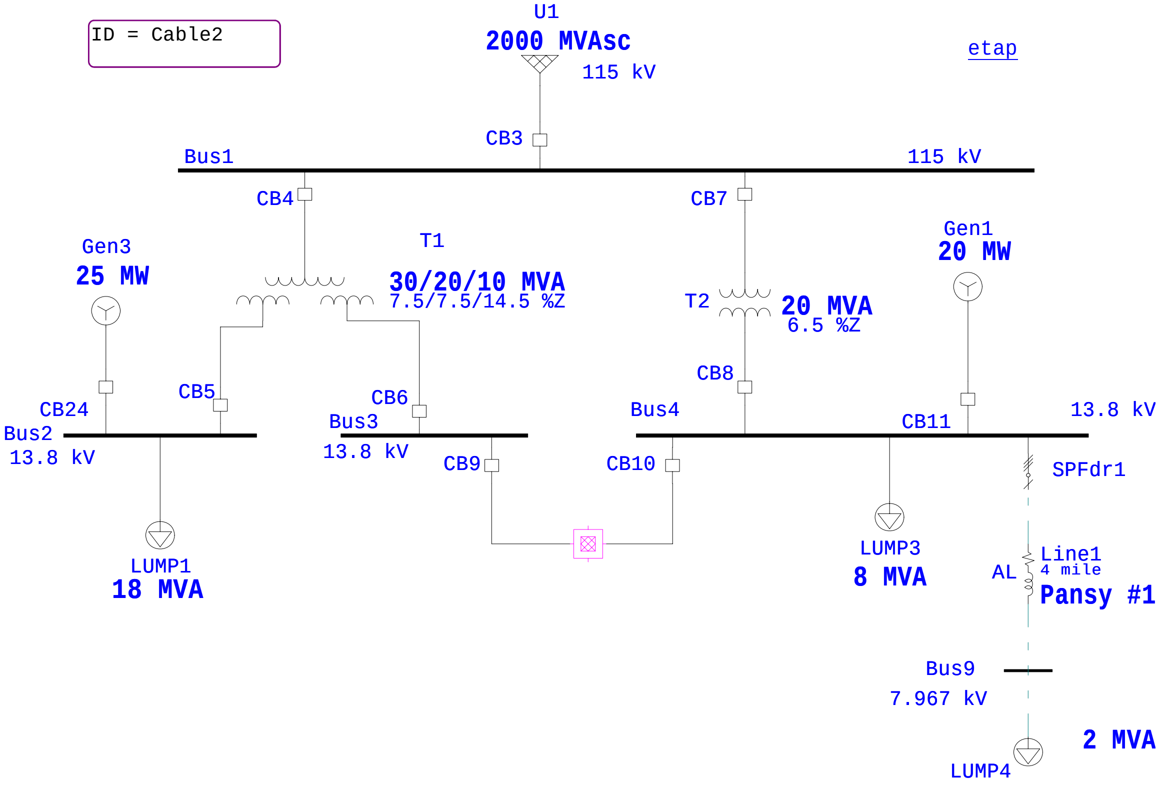
ID = Cable2
U1
2000 MVAsc
115 kV
etap
CB3
Bus1
115 kV
CB4
CB7
T1
30/20/10 MVA
7.5/7.5/14.5 %Z
Gen3
25 MW
T2
20 MVA
6.5 %Z
Gen1
20 MW
CB8
CB5
CB6
CB24
Bus2
13.8 kV
Bus3
13.8 kV
Bus4
CB11
13.8 kV
CB9
CB10
SPFdr1
LUMP3
8 MVA
AL
Line1
4 mile
Pansy #1
LUMP1
18 MVA
Bus9
7.967 kV
2 MVA
LUMP4

Short-Circuit ANSI Example 1

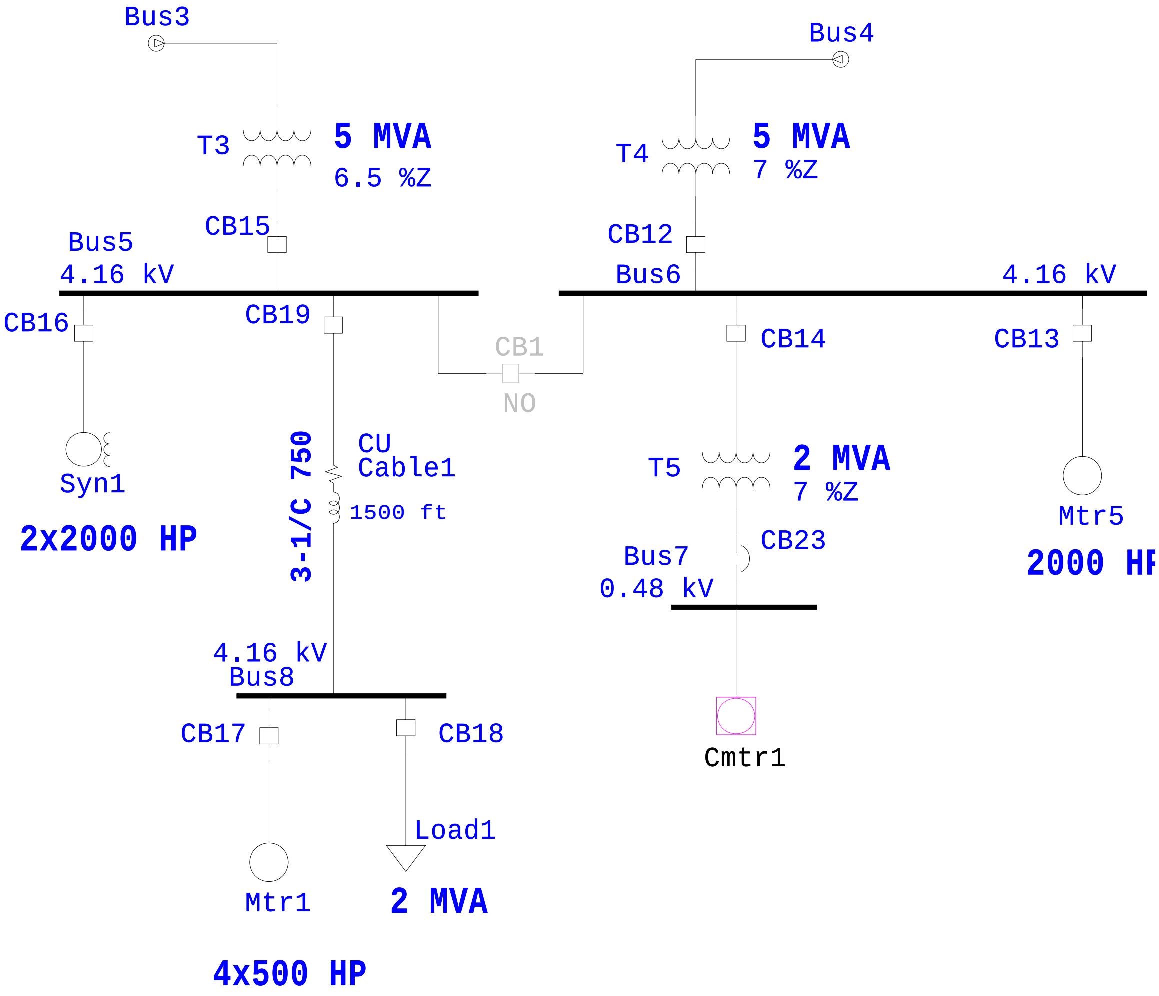
Bus3
Bus4
T3
5 MVA
6.5 %Z
T4
5 MVA
7 %Z
CB15
CB12
Bus5
4.16 kV
Bus6
4.16 kV
CB16
CB19
CB1
NO
CB14
CB13
CU
Cable1
3-1/C 750
1500 ft
Syn1
2x2000 HP
T5
2 MVA
7 %Z
Mtr5
2000 H
Bus7
0.48 kV
CB23
4.16 kV
Bus8
CB17
CB18
Cmtr1
Load1
Mtr1
2 MVA
4x500 HP

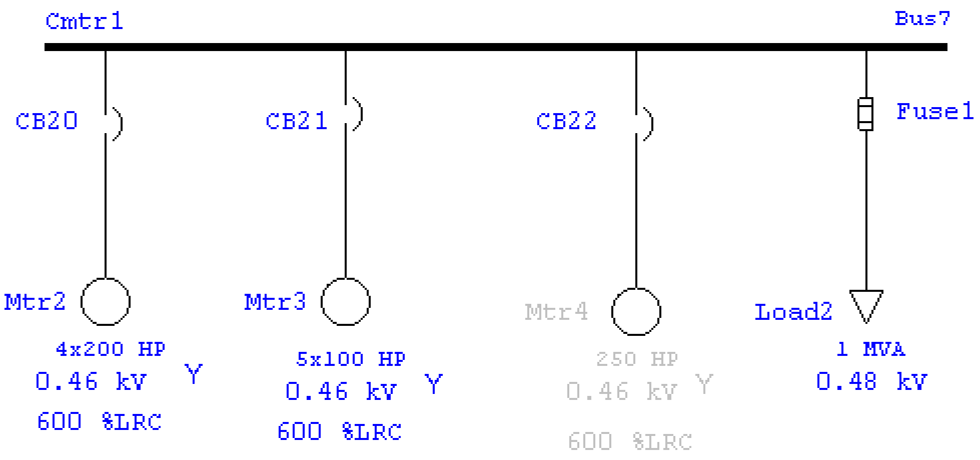
Cmtr1
Bus7
CB20
CB21
CB22
Fuse1
Mtr2
Mtr3
Mtr4
Load2
4x200 HP
0.46 kV
Y
600 %LRC
5x100 HP
0.46 kV
Y
600 %LRC
250 HP
0.46 kV
Y
600 %LRC
1 MVA
0.48 kV

Data Entry for SC

1. Open the ETAP file – SCExample1/SC-ANSI-Example-1
2. Enter the following data to the components for SC calculations

Element	Parameters
U1	3-phase: MVAsc = 2000, X/R = 55; 1-Phase: MVAsc=1750, X/R = 48
Gen1 & Gen3	Subtransient Model, Round-rotor, Use Typical Data. Xd" tolerance = 5% (this option is in "Imp/Model" page)
Syn1	Xd" = X2 = X0 = 15.38%, all X/R = 30.8
All Ind Mtr	Use "Std MF" Option for ANSI SC Z (this option is in "Model" page)
Lump Loads	LRC = 650%, "High"; X/R = 15; Use "Std MF" Option
XFMR	T1: Tol% = 10; T2: Tol% = 7.5
Cable	For all branch/ equipment cables: Tmin = 25, Tmax = 90 (these value are in "Impedance" page)

3. Create two configurations

Configuration	Setup
Normal	Open tie-CB CB1 and close all other CBs.
T3 Down	Close CB1 and open CBs on both sides of T3
T4 Down	Close CB1 and open CBs on both sides of T4

Running SC Calculations

ETAP File – SCExample1/SC-ANSI-Example-1

1. Set up three study cases

Study Case: FaultBus4

Page	Parameter Setting
Info	Adjust Base kV for XFMR Tap
	Do not consider Cable/OL heater for Motor.
	Motor contribution based on Motor Status.
	Fault only bus 4. Contribution Level =3
Standard	Prefault Voltage = 100% of bus nominal kV
	Use Variable Machine X/R.
	HV CB interrupting rating adjusted based on Nominal kV.
	Device duty based on total bus fault current.
	Calculation according to C37.010-1999
	LV MCCB & ICCB – Use “Higher MF” option.
Adjustment	Individual XFMR Z tolerance, global cable R temperature at 25 C.
Alert	Marginal limit = 95

Study Case: FaultAll-A

Page	Parameter Setting
Info	Adjust Base kV for XFMR Tap.
	Do not consider Cable/OL heater for Motor.
	Motor contribution based on Motor Status.
	Fault all buses. Contribution Level =3
Standard	Prefault Voltage = 102% of bus nominal kV
	Use Fixed Machine X/R.
	HV CB interrupting rating adjusted based on Nominal kV & Vf.
	Device duty based on total bus fault current.
	Calculation according to C37.010-1999
	LV MCCB & ICCB – Use “Higher MF” option.
Adjustment	Individual XFMR Z tolerance, global cable R temperature at 25 C.
Alert	Marginal limit = 95

Study Case: FaultAll-B

Page	Parameter Setting
Info	Adjust Base kV for XFMR Tap.
	Do not consider Cable/OL heater for Motor.
	Motor contribution based on Motor Status and loading category (Design).
	Fault all buses. Contribution Level =3
Standard	Prefault Voltage = Vmag * Nominal kV
	Use Fixed Machine X/R.
	HV CB interrupting rating adjusted based on Nominal kV & Vf.
	Device duty based on total bus fault current.
	Calculation according to C37.010-1999
	LV MCCB & ICCB – Use “Higher MF” option.
Adjustment	Individual XFMR Z tolerance, global cable R temperature at 25 C.
Alert	Marginal limit = 95

2. Run Device Duty calculation
    - Study Case – FaultBus4
    - Configuration – Normal, T3 Down, T4 Down
    - Run Device Duty Calculation
    - Check OLV display (Where and how can you set OLV display?)
    - Check report

3. Run Device Duty calculation
    - Study Case – FaultAll-A
    - Configuration – Normal, T3 Down, T4 Down
    - Run Device Duty Calculation
    - Check OLV display – Compare OLV display against the one in 2.
    - Check report

4. Run Device Duty calculation
    - Study Case – FaultAll-B
    - Configuration – Normal, T3 Down, T4 Down
    - Run Device Duty Calculation
    - Check OLV display
    - Check report

5. **Questions:**
    - Which study case results in the worst SC current?
    - Which configuration results in the worst SC current?

Verify and Size Equipment Rating

System File – SCExample1/SC-ANSI-Example-1

1. Factors to be considered
   - System Configuration – PD status and Load configurations
   - Data Revision
   - Study Case – Vf, X/R, rating Adjustment, etc

2. Verify devices with existing settings
   - Bus – Bus1 and Bus 7
   - PD – CB5, CB8, CB10, CB11, and CB23
   - Are there any problems with the existing settings? If yes, fix them.
   - Run SC with the configuration and study case that give the worst case.

3. Select rating/size for some devices
   - Bus –Bus 5 and Bus 6
   - PD – CBs connected to Bus5 and Bus6 (CB1, CB12, CB13, CB14, CB15, CB16)
   - Run SC with the configuration and study case that give the worst case.

Suggested Ratings for Some Components

Element	**Parameters**
Bus 5 & 6	Switchgear: 800? 58 kA, 97.88 kA
CB1,12,13,14, 15, 16, 19	GE, VB-4.16-250, 4.76 kV, 1200 Amp,?, 29 kA

4. Select rating/size for some devices
   - Bus –Bus 3, and Bus8
   - PD – CBs connected to Bus1, and Bus7
   - Steps for device sizing:
     - Identify the worst SC case – combination of revision, configuration & study case.
     - Run SC calculation for the case and determine fault current.
     - Select a device size based on the fault currents.
     - Run SC calculation again to verify device rating.

Suggested Ratings for Some Components

Element	**Parameters**
Bus 3	Switchgear: 600 Amp? 37 kA, 62.44 kA
Bus 8	MCC: 600 Amp? 39 kA, 65.81 kA
CB3, 4, 7	ABB, 121PM20, 121 kV, 1200 Amp, 20 KA
CB 20	Power-CB, ABB, K-800M, 0.48 kV, 800 Amp, 42 kA
CB 21	Molded Case, GE, TEML, 0.48kV, 150 Amp, 65 kA
CB 22	Power-CB, ABB, K-800M, 0.48 kV, 800 Amp, 42 kA
Fuse	Gould Shawmut, A4BQ, 0.6 kV, 700 A, 200 kA

Unbalanced SC Calculation

System File – SCExample1/SC-ANSI-Example-1

1. Set up Ground Connection
    - Set up layered protection – XFMR Delta on HV side and Y grounded on LV side.
    - 13.8 kV – 100 Amp Resistance grounding
    - 4.16 kV – 10 Amp Resistance grounding
    - 0.48 kV – Delta/Y solid-grounded
    - Utility – Solid grounded
    - All loads – ungrounded

2. Run unbalanced calculations using existing configuration and study cases
    - What are the differences between ½. 1.5-4, and 30 cycles?

3. Check Result
    - Check result on OLV – change display option to show different fault calculation results.
    - Check result on crystal report.
    - Check effect of grounding connection type and value on zero sequence current.